Body Assembly

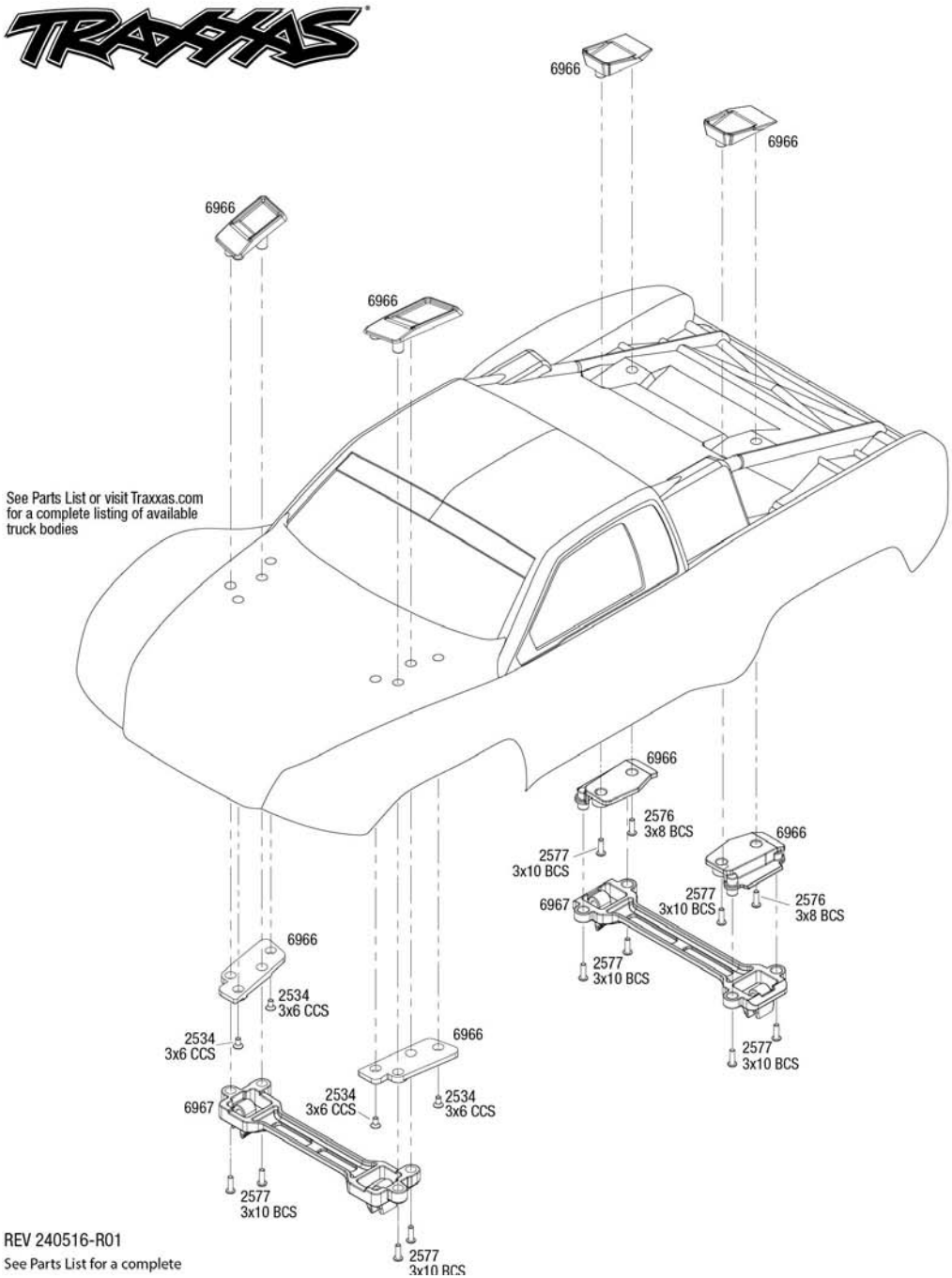

REV 240516-R01

See Parts List for a complete

Completed Assembly (view from top)

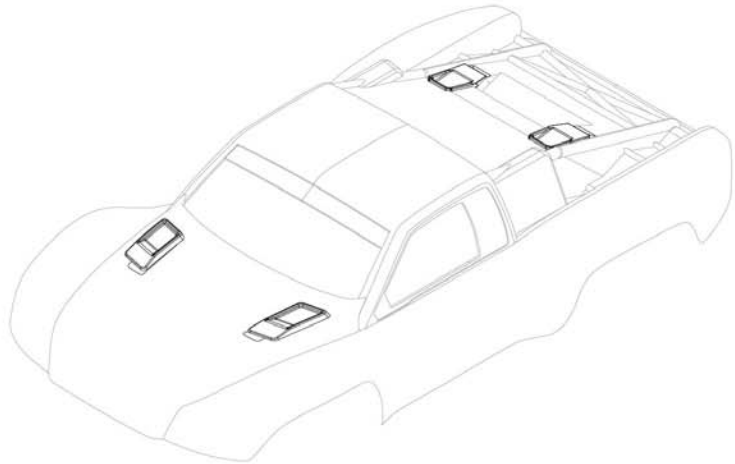

Completed Assembly (view from bottom)

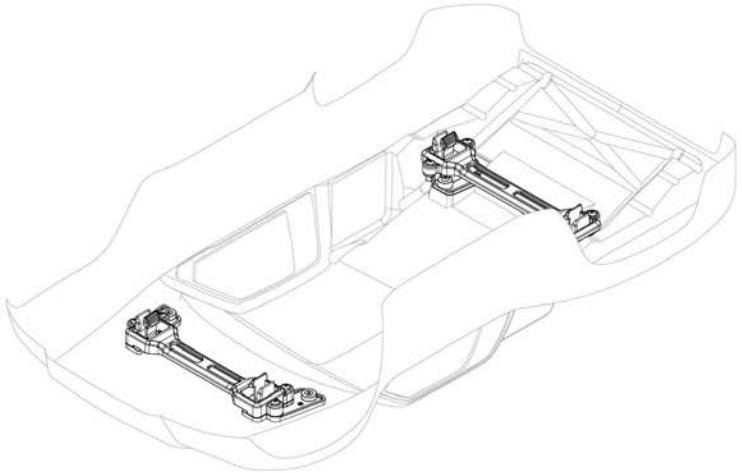

Specifications on this page are subject to change without notice. Every attempt has been made to ensure