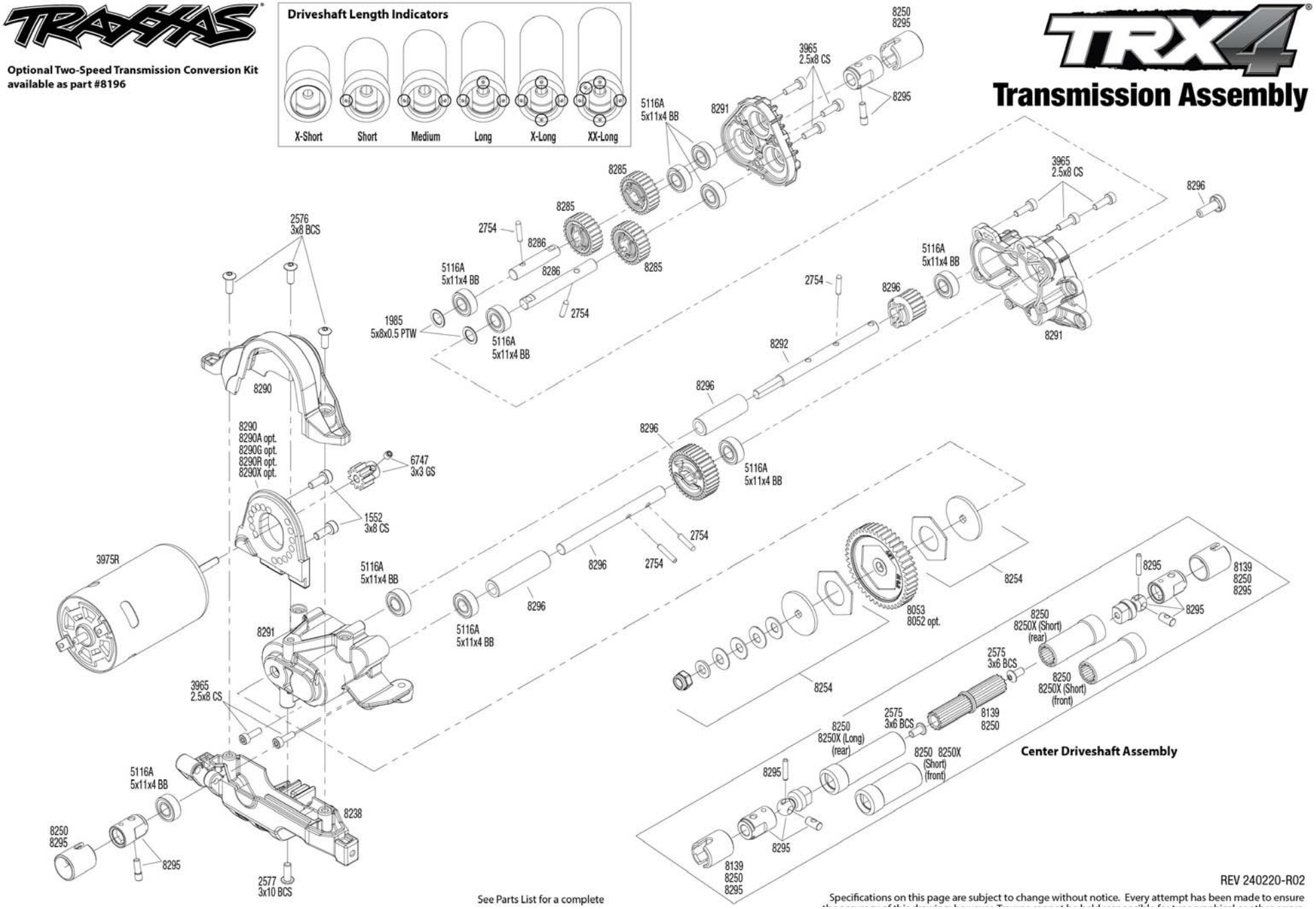
Optional Two-Speed Transmission Conversion Kit available as part #8196
Driveshaft Length Indicators
X-Short
Short
Medium
Long
X-Long
XX-Long
TRX4
Transmission Assembly
8250
8295
3965
2.5x8 CS
8295
5116A
5x11x4 BB
8291
8285
8285
8285
2754
8286
8286
2754
5116A
5x11x4 BB
1985
5x8x0.5 PTW
5116A
5x11x4 BB
2576
3x8 BCS
3965
2.5x8 CS
8296
5116A
5x11x4 BB
2754
8296
8291
8292
8296
8296
5116A
5x11x4 BB
8290
8290
8290A opt.
8290G opt.
8290R opt.
8290X opt.
6747
3x3 GS
1552
3x8 CS
2754
3975R
5116A
5x11x4 BB
8296
2754
8296
8254
8053
8052 opt.
8291
5116A
5x11x4 BB
3965
2.5x8 CS
8254
8295
8139
8250
8295
8250
8250X (Short)
(rear)
8295
2575
3x6 BCS
8250
8250X (Short)
(front)
2575
3x6 BCS
8139
8250
8250
8250X (Long)
(rear)
8250 8250X
(Short)
(front)
Center Driveshaft Assembly
5116A
5x11x4 BB
8238
8250
8295
8295
2577
3x10 BCS
8295
8139
8250
8295
REV 240220-R02
See Parts List for a complete
Specifications on this page are subject to change without notice. Every attempt has been made to ensure