1/16 SLASH 4x4

Transmission Assembly

Available fully assembled as part #7095
(motor and pinion gear not included)

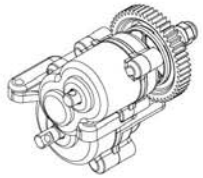

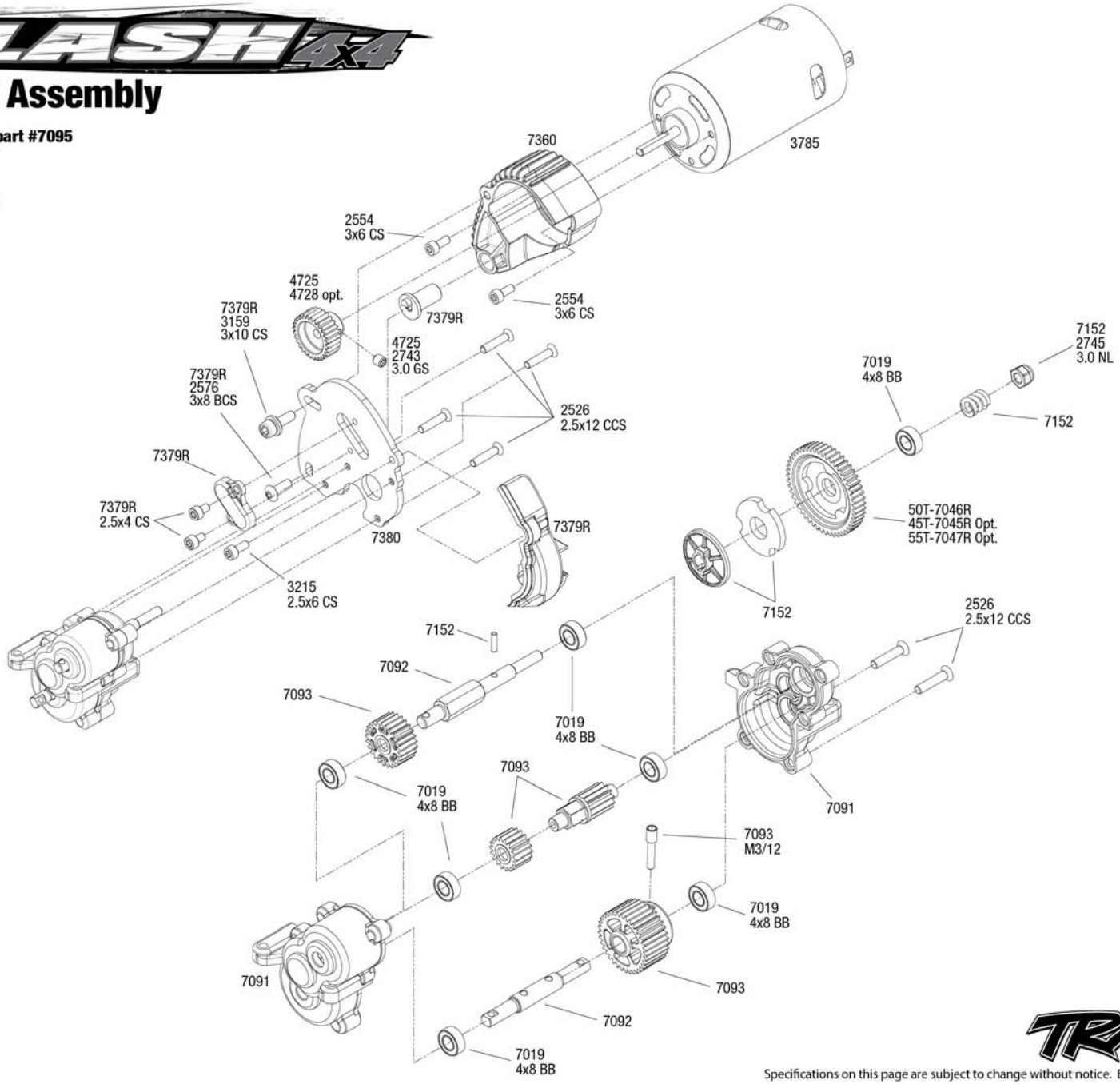

REV 231206-R01

See Parts List for a complete listing of optional accessories

Specifications on this page are subject to change without notice. Every attempt has been made to ensure